MERCURY (30 JET (3 CYL.))
Serial Nbr Range: 9973100 THRU 0P016999 (BEL)

GEAR HOUSING (PROPELLER SHAFT)(1.83:1 GEAR RATIO)

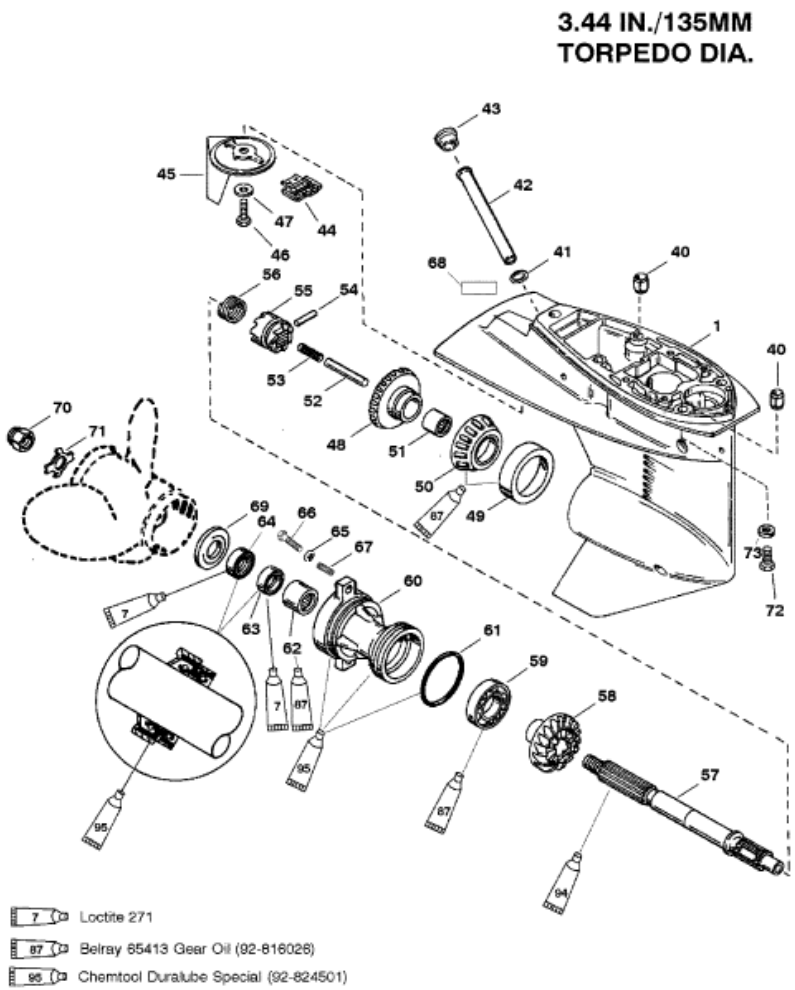


## Parts List

| Ref | Class | Part | Description | Qty | Comment | Footnote |
|---|---|---|---|---|---|---|
| - | 1682 | 821306A26 | GEAR HOUSING | 1 | (BLACK) SHORT | |
| - | 1682 | 821306A27 | GEAR HOUSING | 1 | (GRAY) SHORT | |
| - | 1682 | 821306A28 | GEAR HOUSING | 1 | (BLACK) LONG | |
| - | 1682 | 821306A29 | GEAR HOUSING | 1 | (GRAY) LONG | |
| 1 | 1682 | 821306A12 | GEAR HOUSING | 1 | (BASIC-BLACK) | |
| 1 | 1682 | 821306A13 | GEAR HOUSING | 1 | (BASIC-GRAY) | |
| 40 | 17 | 821327 | DOWEL PIN | 2 | | |
| 41 | 27 | 823942 | GASKET WATER TUBE | 1 | | 1 |
| 42 | 32 | 821828 | TUBE | 1 | | |
| 43 | 19 | 824928 | PLUG-RUBBER | 1 | | |
| 44 | | 821829 | SCREEN-WATER INLET | 1 | | |
| 45 | | 822157C 2 | TRIM TAB | 1 | | |
| 46 | 10 | 824970 20 | SCREW (M8 X 20) | 1 | | |
| 47 | 12 | 72397 | WASHER | 1 | | |
| 48 | 43 | 822162A 2 | FORWARD GEAR ASSEMBLY (2 | 1 | | |
| 49 | 31 | 99328A 1 | ROLLER BEARING ASSEMBL' | 1 | | |
| 50 | | NSS | CUP | 1 | | 4 |
| 51 | 31 | 41326 | ROLLER BEARING | 1 | | |
| 52 | | 821578 | FOLLOWER-CAM | 1 | | |
| 53 | 24 | 826199 1 | SPRING | 1 | | |
| 54 | 17 | 85093 | PIN-CROSS | 1 | | |
| 55 | 52 | 821314 | CLUTCH | 1 | | |
| 56 | 24 | 38114 | SPRING | 1 | | |
| 57 | 44 | 821577 2 | PROPELLER SHAFT | 1 | | |
| 58 | 43 | 822163 | REVERSE GEAR (22 TEETH) | 1 | | |
| 59 | 30 | 20839 | BALL BEARING | 1 | | |
| 60 | | 19291A 3 | BEARING CARRIER | 1 | | |
| 61 | 25 | 815460 | O RING | 1 | | 1,5 |
| 62 | 31 | 21700 | NEEDLE BEARING | 1 | | |
| 63 | 26 | 69188 | OIL SEAL | 1 | | 5 |
| 64 | 26 | 69189 | OIL SEAL | 1 | | 5 |
| 65 | 12 | 70132 | WASHER | 2 | | |
| 65 | 12 | 855941 | WASHER | 2 | (USE WITH THREADED INSERT | |
| 66 | 10 | 40003 53 | SCREW (M8 X 25 - CAP SCREW | 2 | | |
| 66 | 10 | 855940 30 | SCREW | 2 | (USE WITH THREADED INSERT | |
| 67 | | 822773 1 | THREADED INSERT | 2 | | |
| 68 | | NSS | DECAL 1.83:1 (12 X 22) | 1 | | 4 |
| 69 | | 73345A 1 | THRUST HUB | 1 | | |
| 70 | 11 | 69578A 1 | PROP NUT | 1 | | |
| 71 | 14 | 76281 | TAB WASHER | 1 | | |
| 72 | 10 | 40003 80 | SCREW | 4 | | |